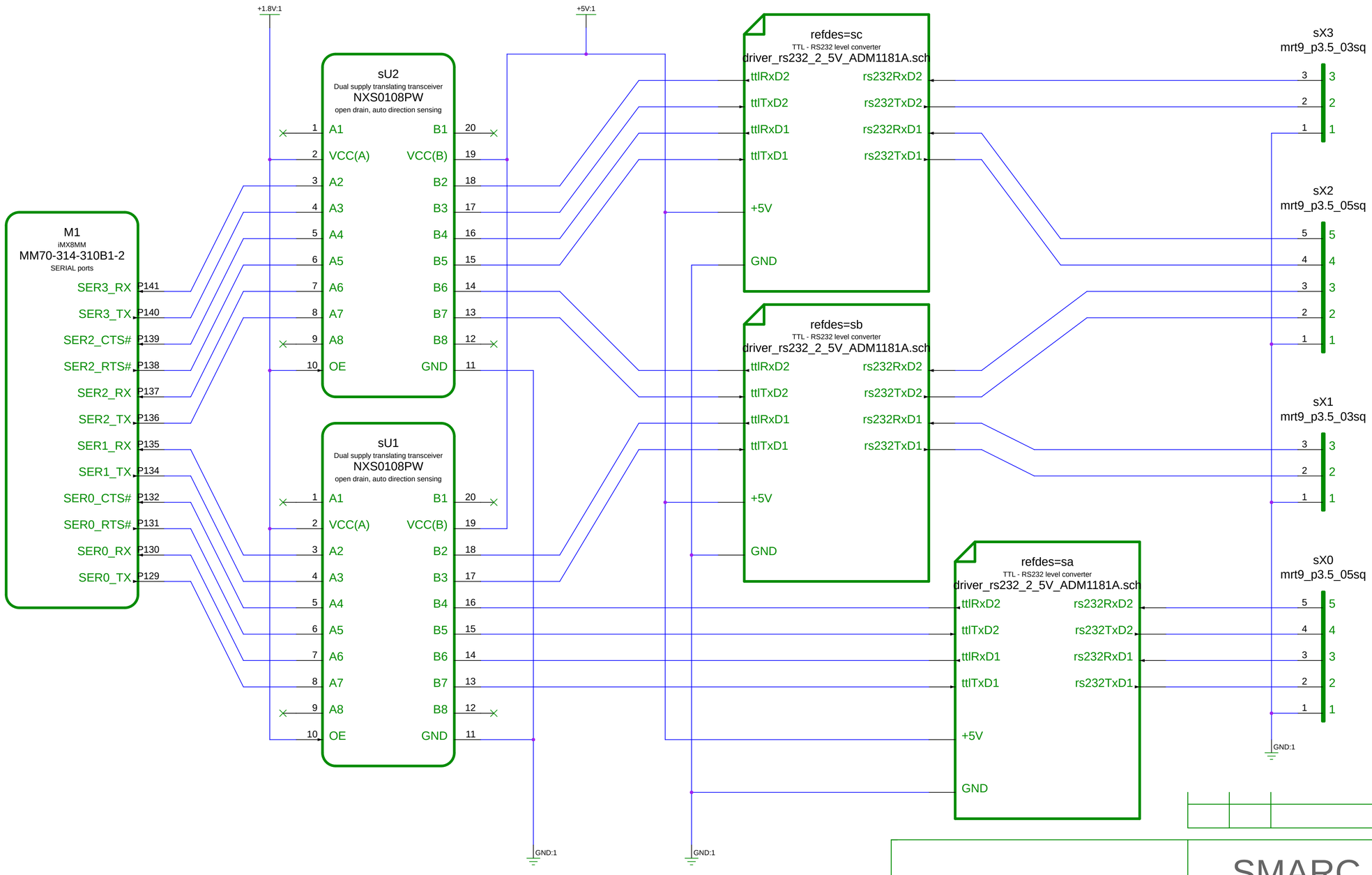

SMARC carrier board

Serial ports, Vdd = 5V

S